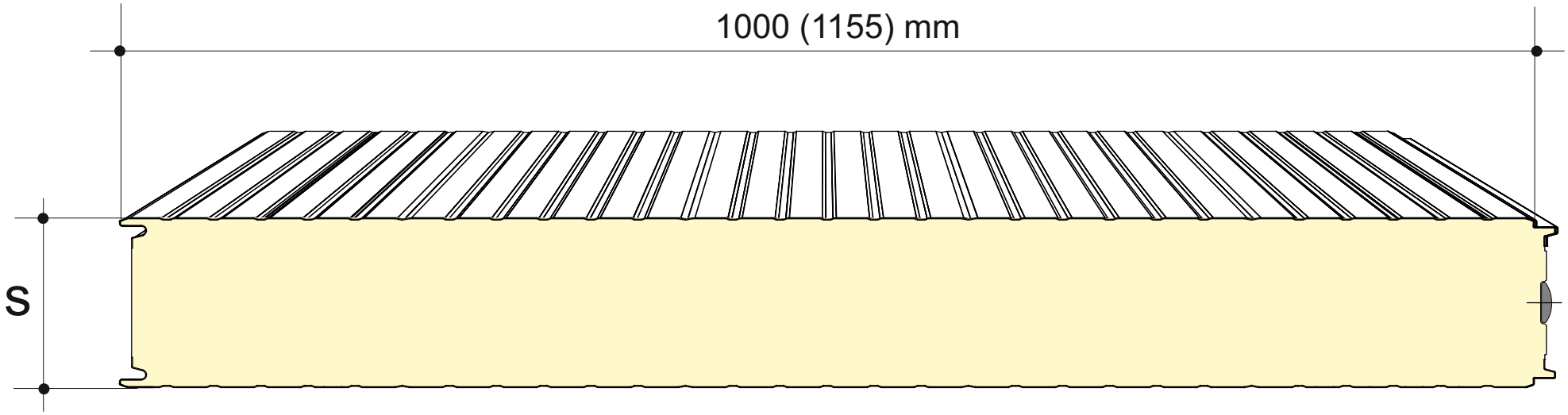
1000 (1155) mm
S